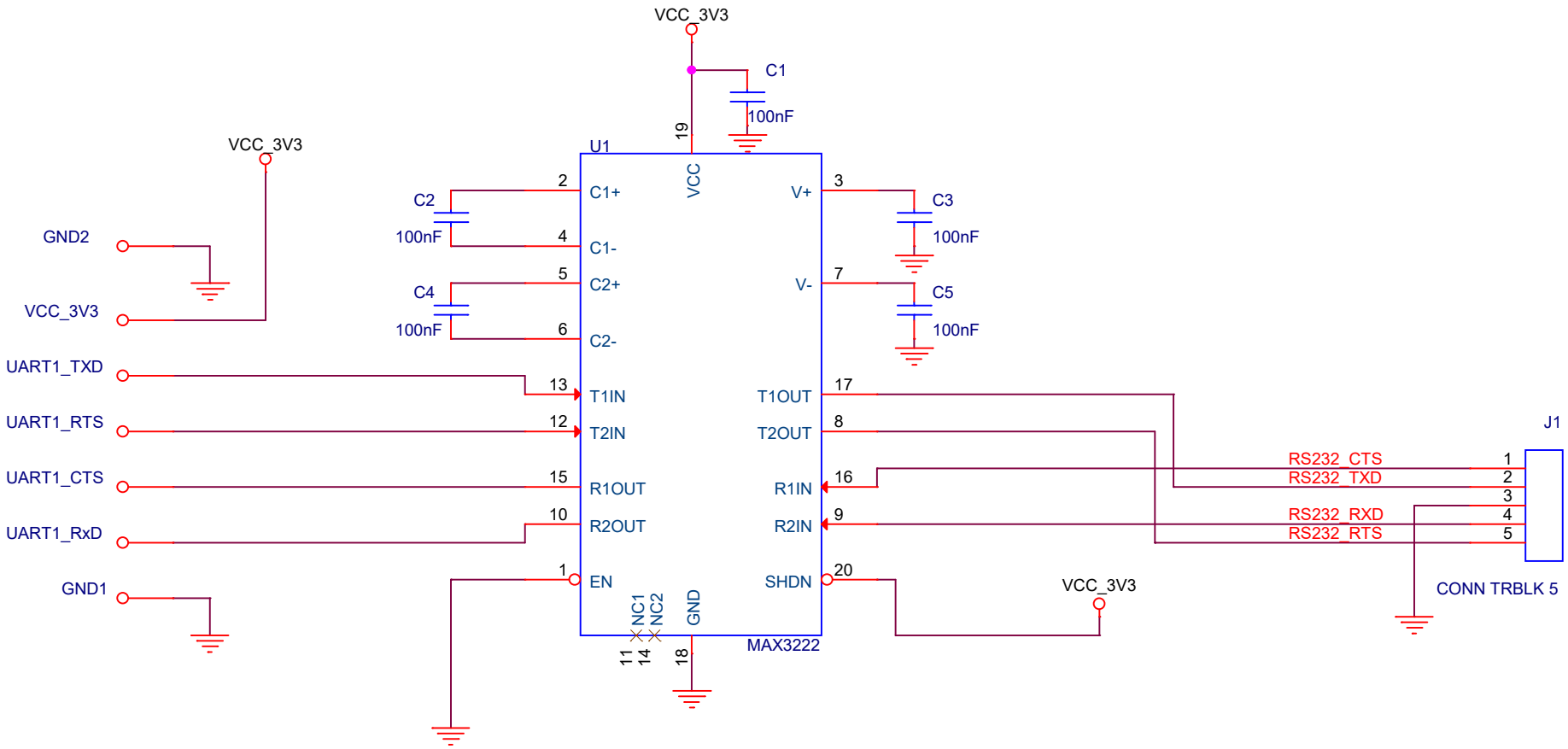

PCB1

PCB, PM-RS232TB5, Rev 1.0
188C04050

ZZ1

P/N = 188Z04050

PARSER_VERSION_1.0

Title	PM-RS232TB5	
Size A	Document Number 1	Rev 1.0
Date: Wednesday, April 20, 2022	Sheet 1 of 1	