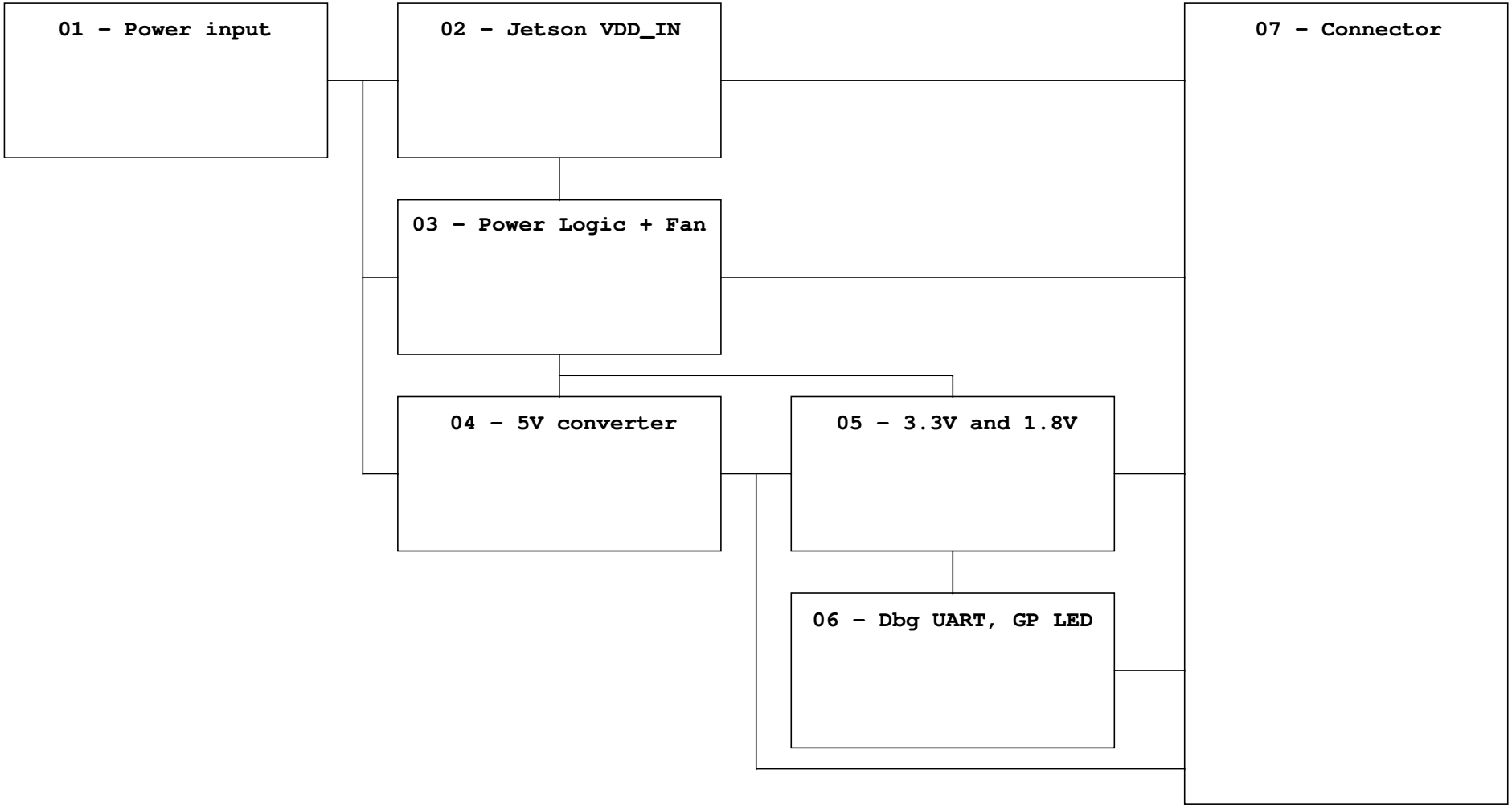

ZZ1

P/N = 188Z10030

PARSER_VERSION_1.0

PCB1

P/N = 188C04880

C-LAB Ltd. (972) 4 8290100
P.O.Box 26
Yokneam 20692, Israel
All Right reserved.
Unauthorized duplication prohibited

Size	Title	Rev
A4	PM-PWRJET	1.1
	Document Number: 8000270000	
Date: Wednesday, October 22, 2025	Sheet 1 of 8	

Max power loss:
30mOhm max contact resistance from spec × 2 contacts
@ 5A: 1.5W
Measured resistance with 600mm 16AWG cable: 56mOhm

Limited reverse polarity protection: -30V
Max power loss: 0.215W @ 5A

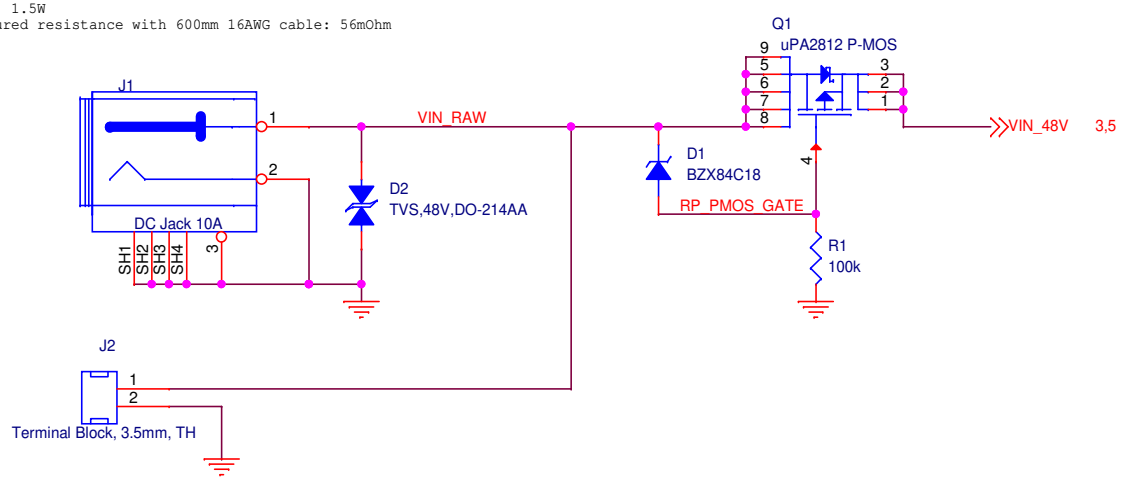

C-LAB Ltd. (972) 4 8290100
P.O.Box 26
Yokneam 20692, Israel
All Right reserved.
Unauthorized duplication prohibited

Size	Title	Rev
A4	PMPWR-JETSON	1.1
	Document Number: 8000270000	
Date: Wednesday, October 22, 2025	Sheet 2 of 8	

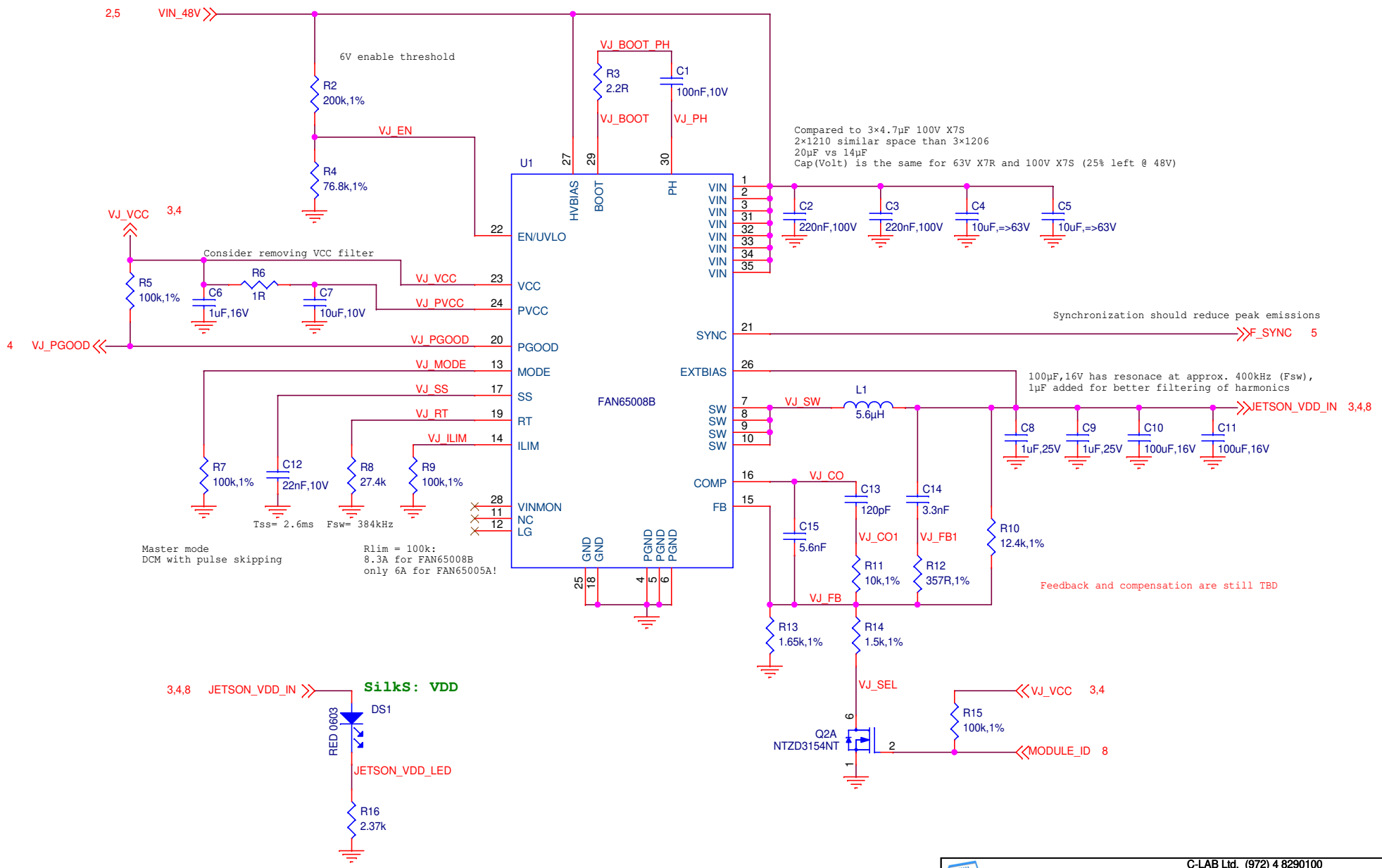

C-LAB Ltd. (972) 4 8290100
P.O.Box 26
Yokneam 20692, Israel
All Right reserved.
Unauthorized duplication prohibited

Size	Title	Rev
A4	PM-PWRJET	1.1
	Document Number: 8000270000	
Date: Wednesday, October 22, 2025	Sheet 3 of 8	

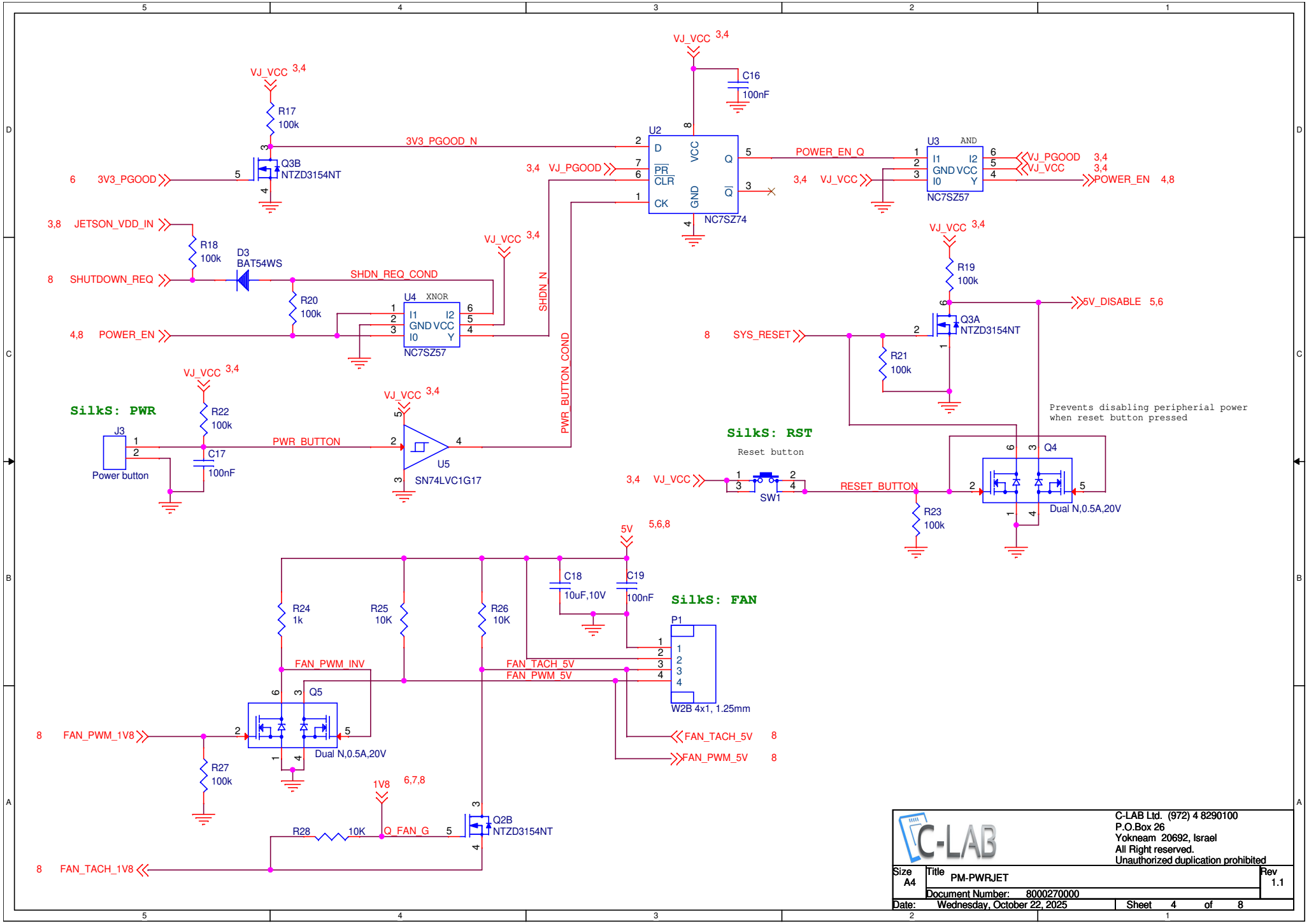

C-LAB Ltd. (972) 4 8290100
P.O.Box 26
Yokneam 20692, Israel
All Right reserved.
Unauthorized duplication prohibited

Size	Title	Rev
A4	PM-PWRJET	1.1
	Document Number: 8000270000	
Date: Wednesday, October 22, 2025	Sheet 4 of 8	

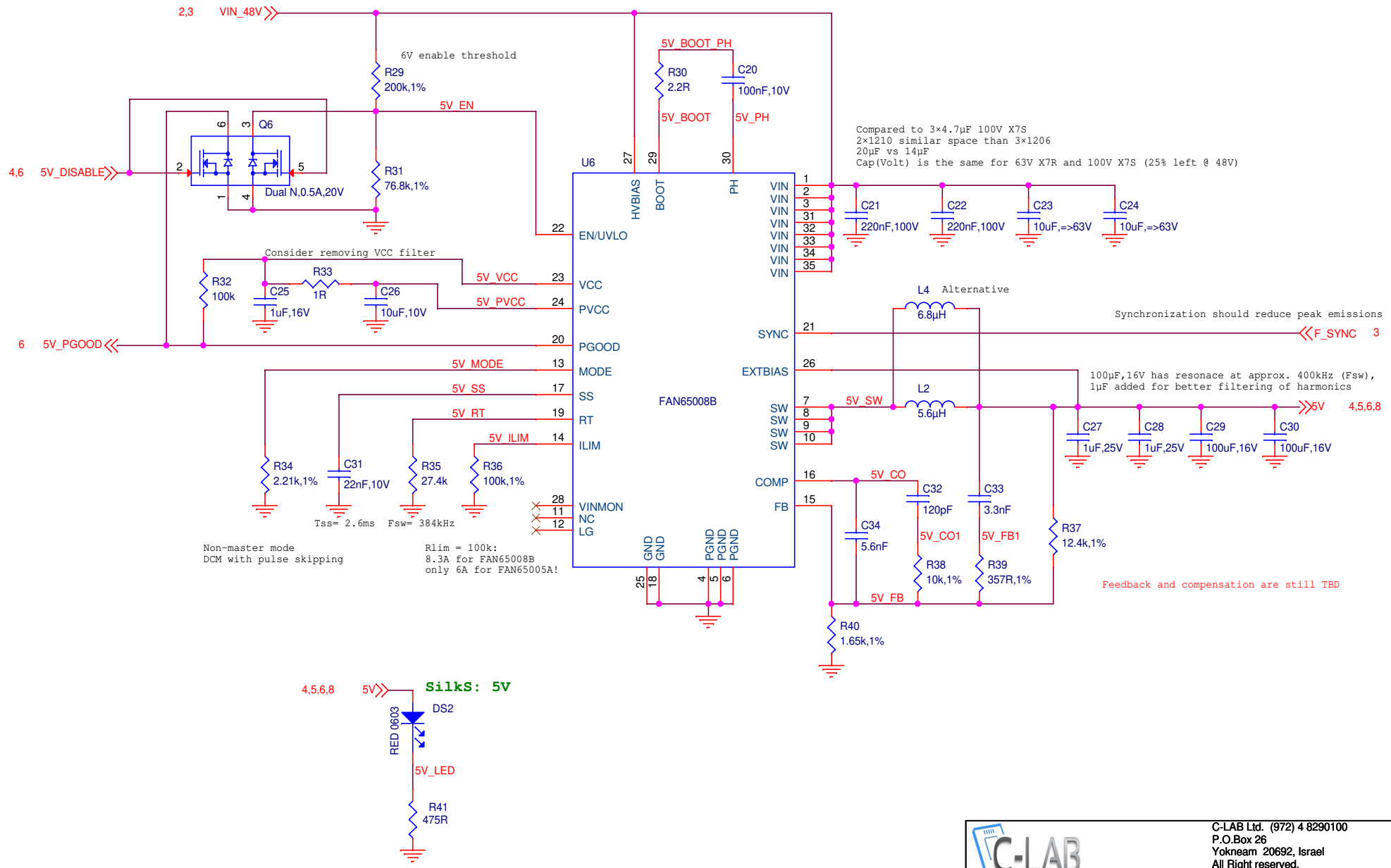

C-LAB Ltd. (972) 4 8290100
P.O.Box 26
Yokneam 20692, Israel
All Right reserved.
Unauthorized duplication prohibited

Size	Title	Rev
A4	PM-PWRJET	1.1
	Document Number: 8000270000	
Date: Wednesday, October 22, 2025	Sheet 5 of 8	

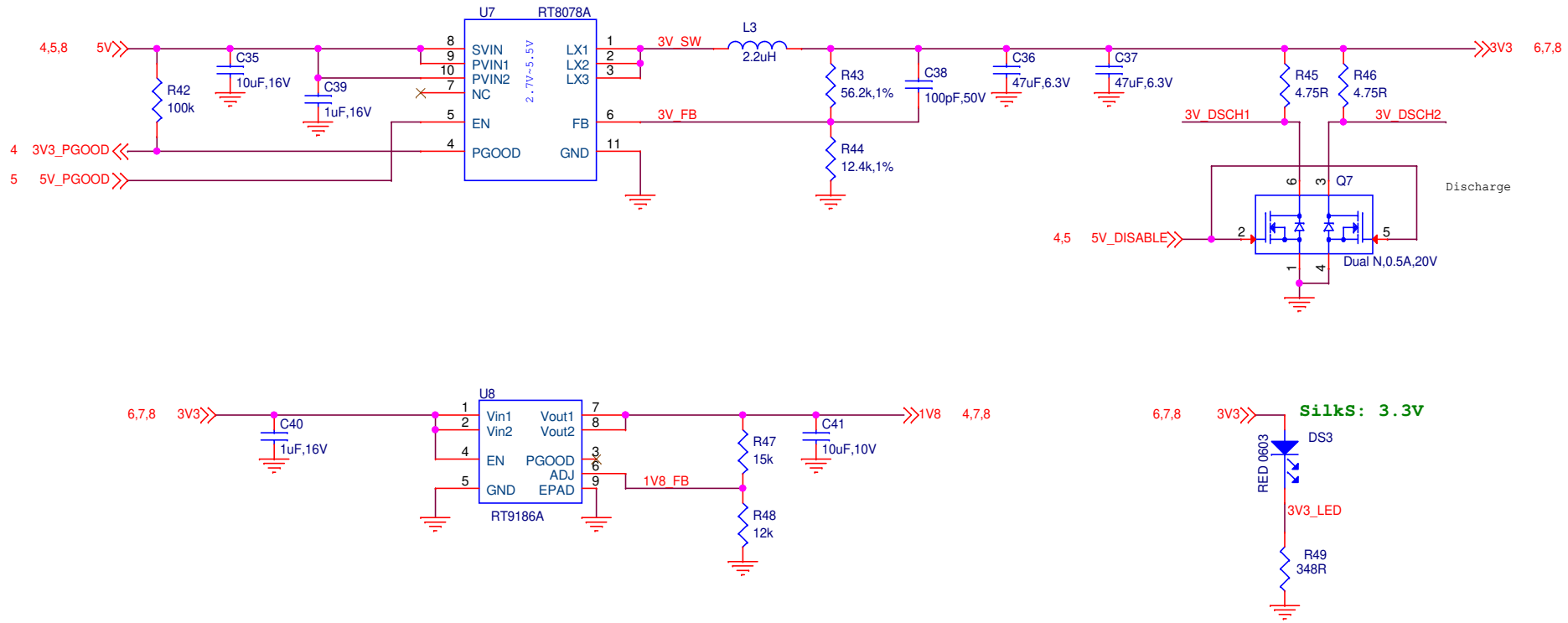

C-LAB Ltd. (972) 4 8290100
P.O.Box 26
Yokneam 20692, Israel
All Right reserved.
Unauthorized duplication prohibited

Size	Title	Rev
A4	PM-PWRJET	1.1
	Document Number: 8000270000	
Date: Wednesday, October 22, 2025	Sheet 6 of 8	

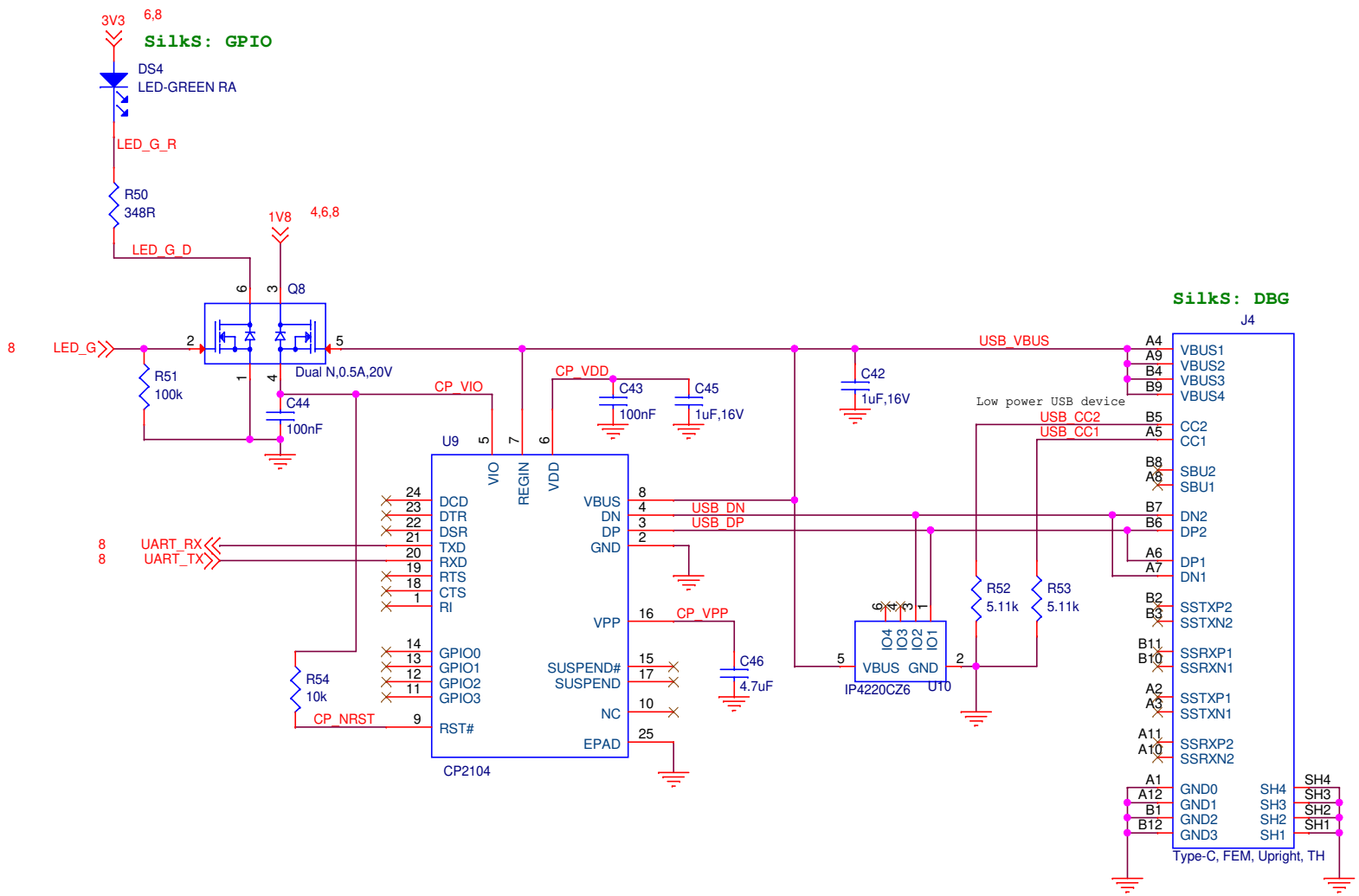

C-LAB Ltd. (972) 4 8290100
P.O.Box 26
Yokneam 20692, Israel
All Right reserved.
Unauthorized duplication prohibited

Size	Title	Rev
A4	PM-PWRJET	1.1
	Document Number: 8000270000	
Date: Wednesday, October 22, 2025	Sheet 7 of 8	

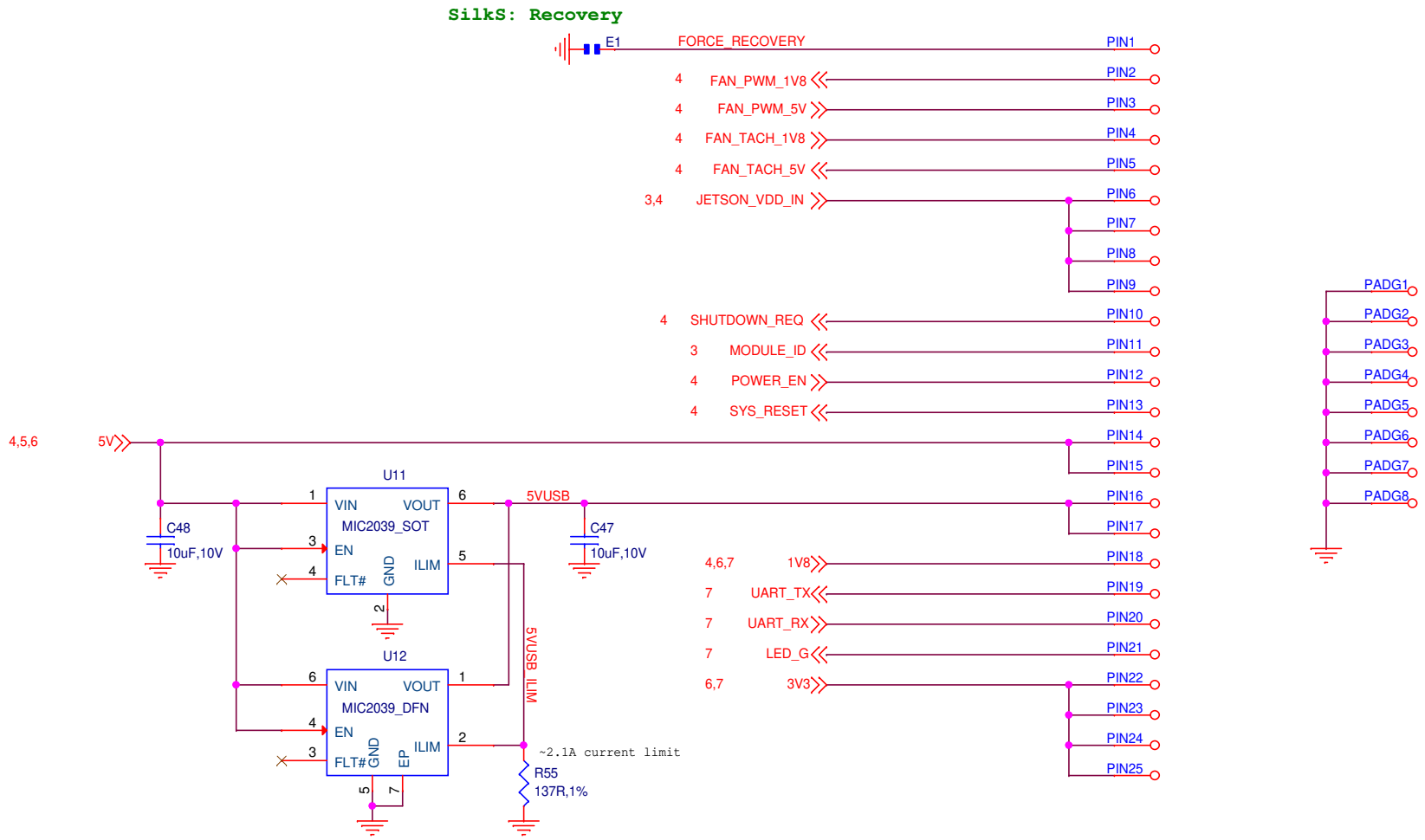

C-LAB Ltd. (972) 4 8290100
P.O.Box 26
Yokneam 20692, Israel
All Right reserved.
Unauthorized duplication prohibited

Size	Title	Rev
A4	PM-PWRJET	1.1
	Document Number: 8000270000	
Date: Wednesday, October 22, 2025	Sheet 8 of 8	